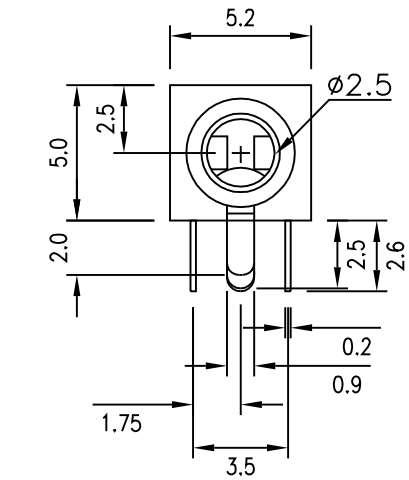

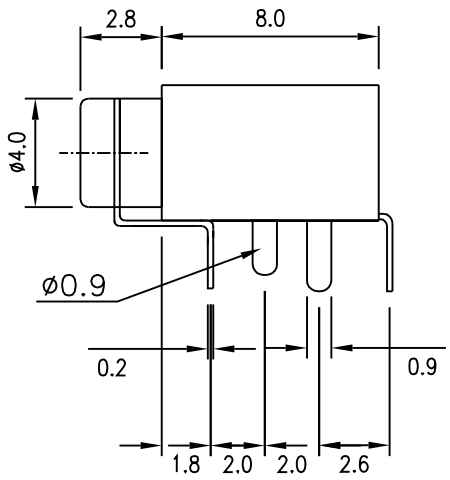

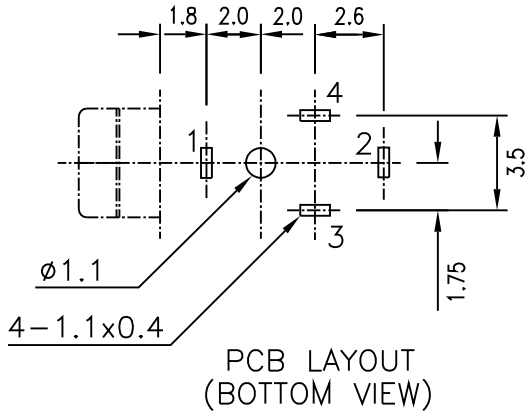

PCB LAYOUT
(BOTTOM VIEW)

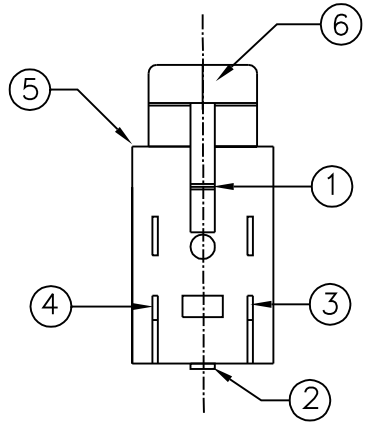

NO.	NAME	MATERIAL	FINISH	Q'TY
1	GROUND TERM.	BRASS t:0.2	TIN PLATED	1
2	SPRING TERM.	PHOS. BRONZE t:0.2	TIN PLATED	1
3	SPRING CONTACT	PHOS. BRONZE t:0.2	TIN PLATED	1
4	SPRING CONTACT	PHOS. BRONZE t:0.2	TIN PLATED	1
5	HOUSING	P.B.T.	BLACK	1
6	PLUG BUSHING	BRASS	NICKEL PLATED	1

SCHEMATIC

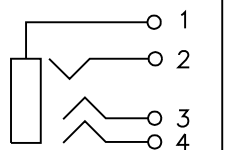

易昕企業有限公司
LEAMAX ENTERPRISE CO., LED.

PROJ	SCALE : F DO NOT SCALE DWG		MOLD NO 3271-4W		
APP			MODEL 2.5ø	FILE NO iron head	REV. X1
CHK	CCJ	90.09.04			
DGN	AMY	90.09.04	UNIT MM	SHT 1 OF 1	SIZE A4
DRW	SHIEH	90.09.04			